hohner GROUP

AD UN PASSO
DAL FUTURO

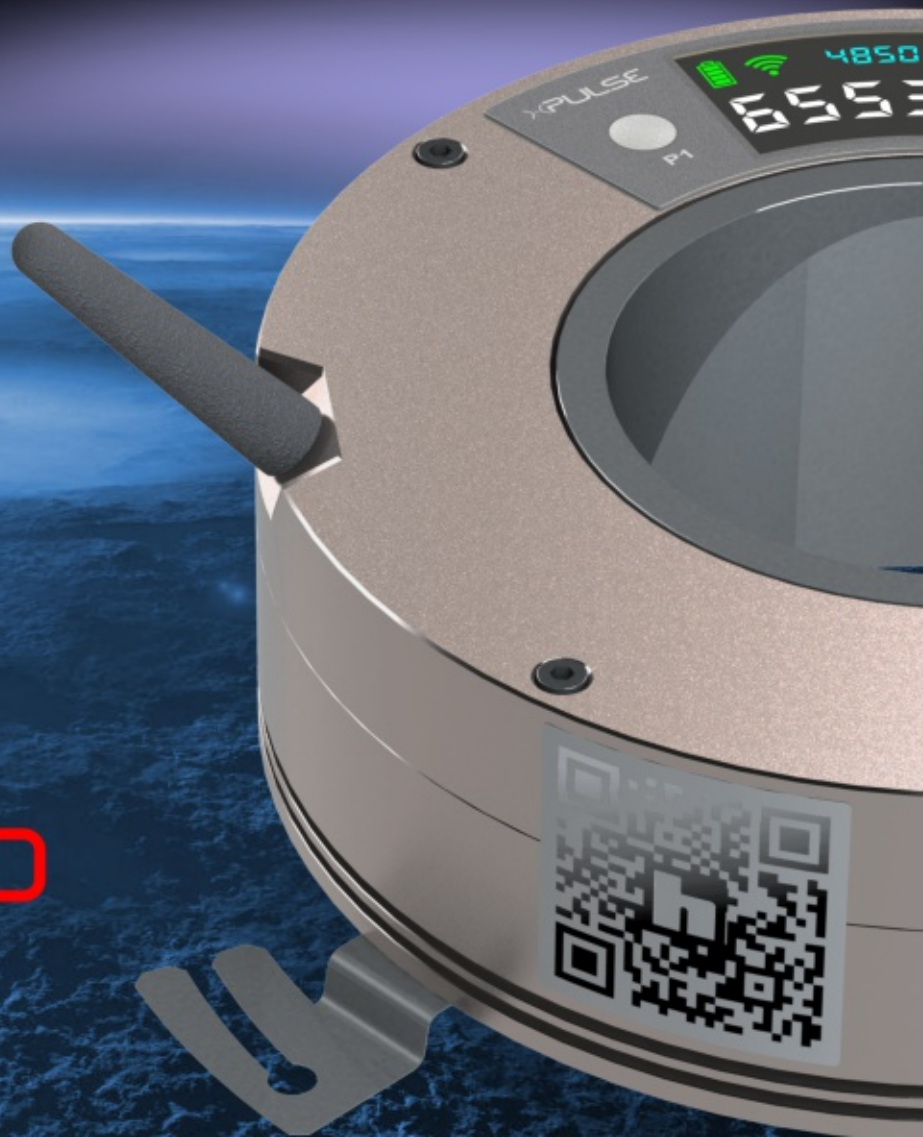

About us

Hohner is a group, that is specialized in the encoders production and it is active on the international market for more than 40 years. The group is composed of 6 groups located in Europe and in America and also of several distributors in more than 50 countries. Hohner Group employs highly qualified personnel and independently deals with all the perspectives related to the realization of the encoders, from the mechanical and electronic design to the production of optical discs.

Hohner produces a wide range of optical rotary encoders as well as magnetic ones, incremental and absolute types, with a variety of outputs circuits configurations: Square wave, Sinus-Cosine, Wireless, analogical 4-20mA and 0-10Volt, SSI and all the most various FieldBus configurations on today's market.

We also offer a wide range of products with Atex certification and intrinsically safety for usage in environments with potential of gas or dust explosion also in zone 0. The range of Hohner's products offers a wide choice of mechanical solutions and particularly encoders with hollow shaft available from 4 till 210mm. Degrees of protection up to IP68M, IP69K, so for submersion up to 6000 meters, operating temperature from -40° C to +120°C.

The areas of application are of course the most varied, however over the years Hohner Group specialized in offering ad hoc solutions for the machines processing materials like marble, glass, wood and metals. In the last years Hohner has designed and realized specific products for the oil and gas sector, becoming the world's leading company.

Custom solutions

As we produce and develop all our mechanical and electrical design, we can offer custom-made solution quickly and cost effectively. Please let us know if you require anything out of ordinary for your application.

Incremental and Absolute solid shaft encoder - 1

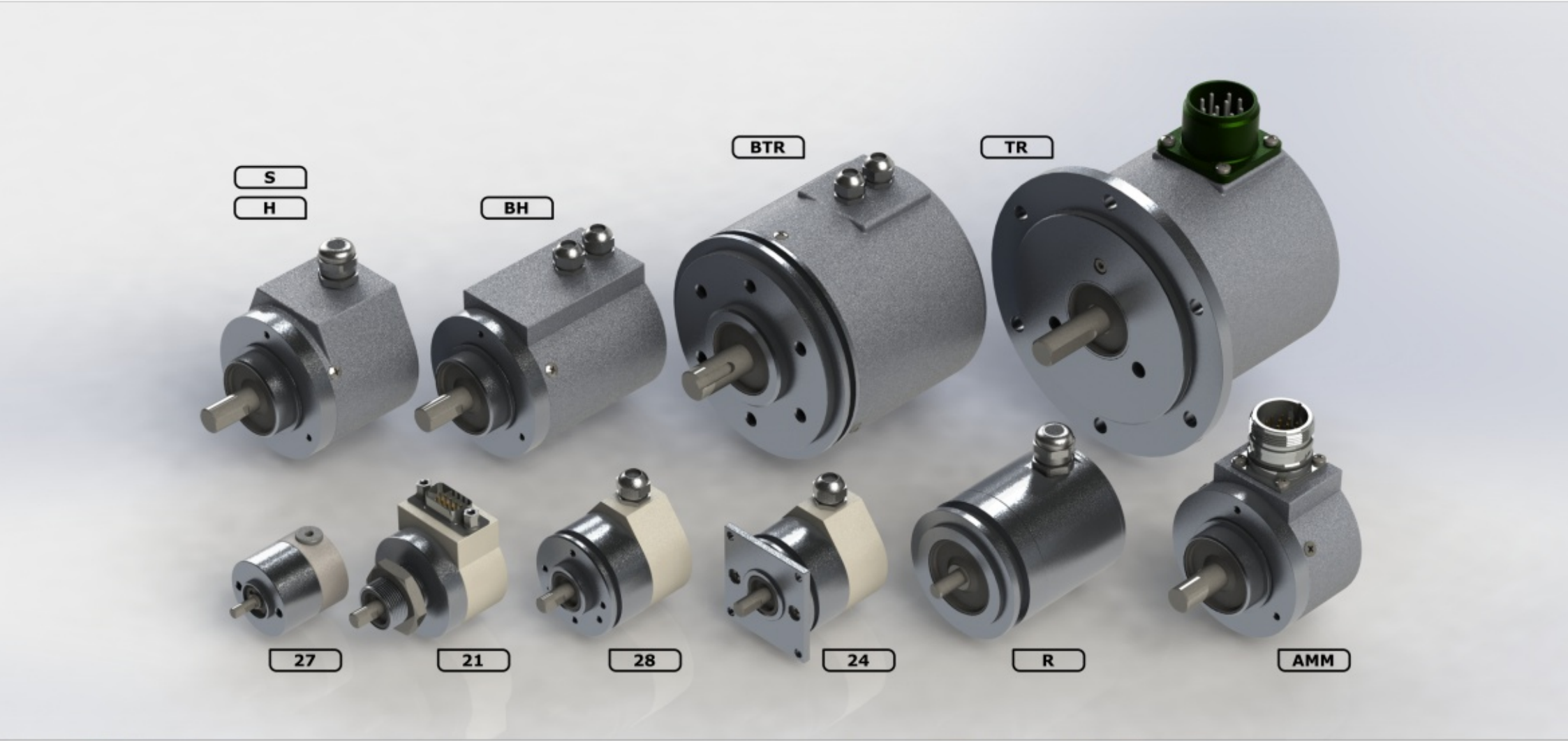

Incremental up to 160000 ppr · Absolute up to 33 bit · Aluminum or Stainless steel housing
High Temperature · Incremental Quadrature output · Absolute Parallel, Analog, SSI output

Incremental and Absolute solid shaft encoder - 2

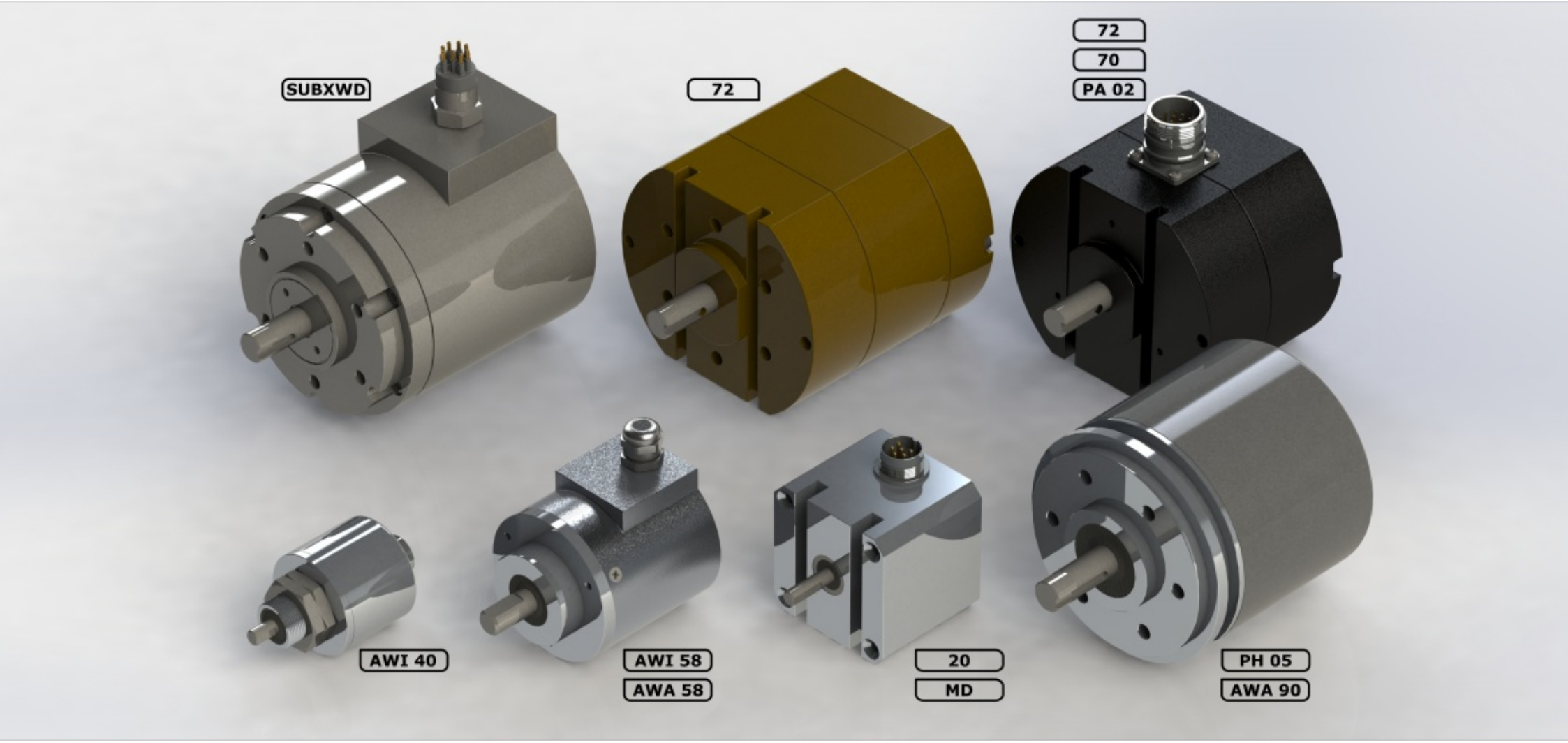

Incremental up to 10000 ppr · Absolute up to 24 bit · Aluminum or Stainless steel housing
High Temperature · Incremental Quadrature output · Absolute Parallel

Incremental and Absolute hollow shaft encoder · Diameter shaft from 4mm to 250mm - 1

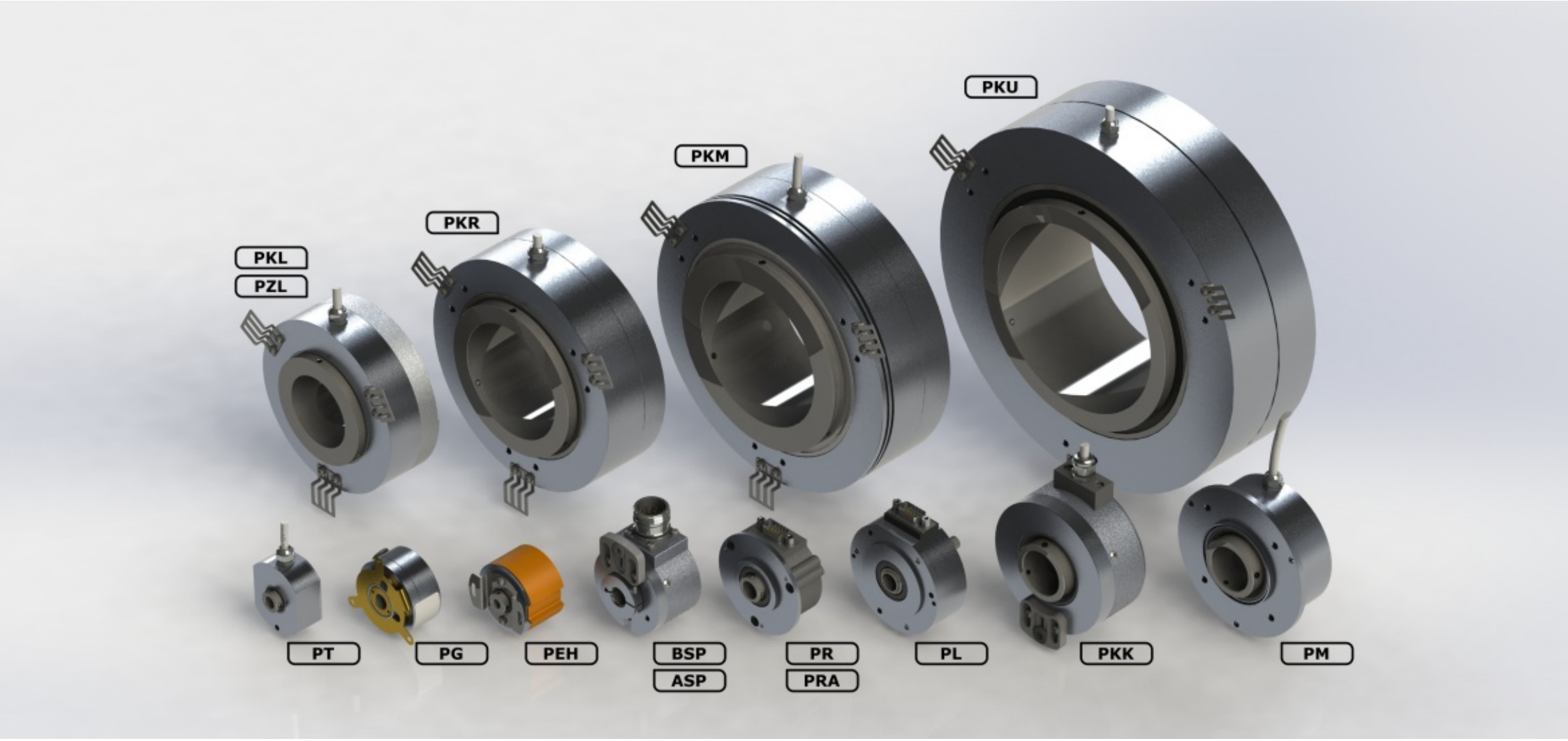

Incremental up to 160000 ppr · Absolute up to 17 bit · Aluminum or Stainless steel housing
High Temperature · Electronic Redundant · Motor feedback

Incremental and Absolute hollow shaft encoder · Diameter shaft from 6mm to 50mm - 2

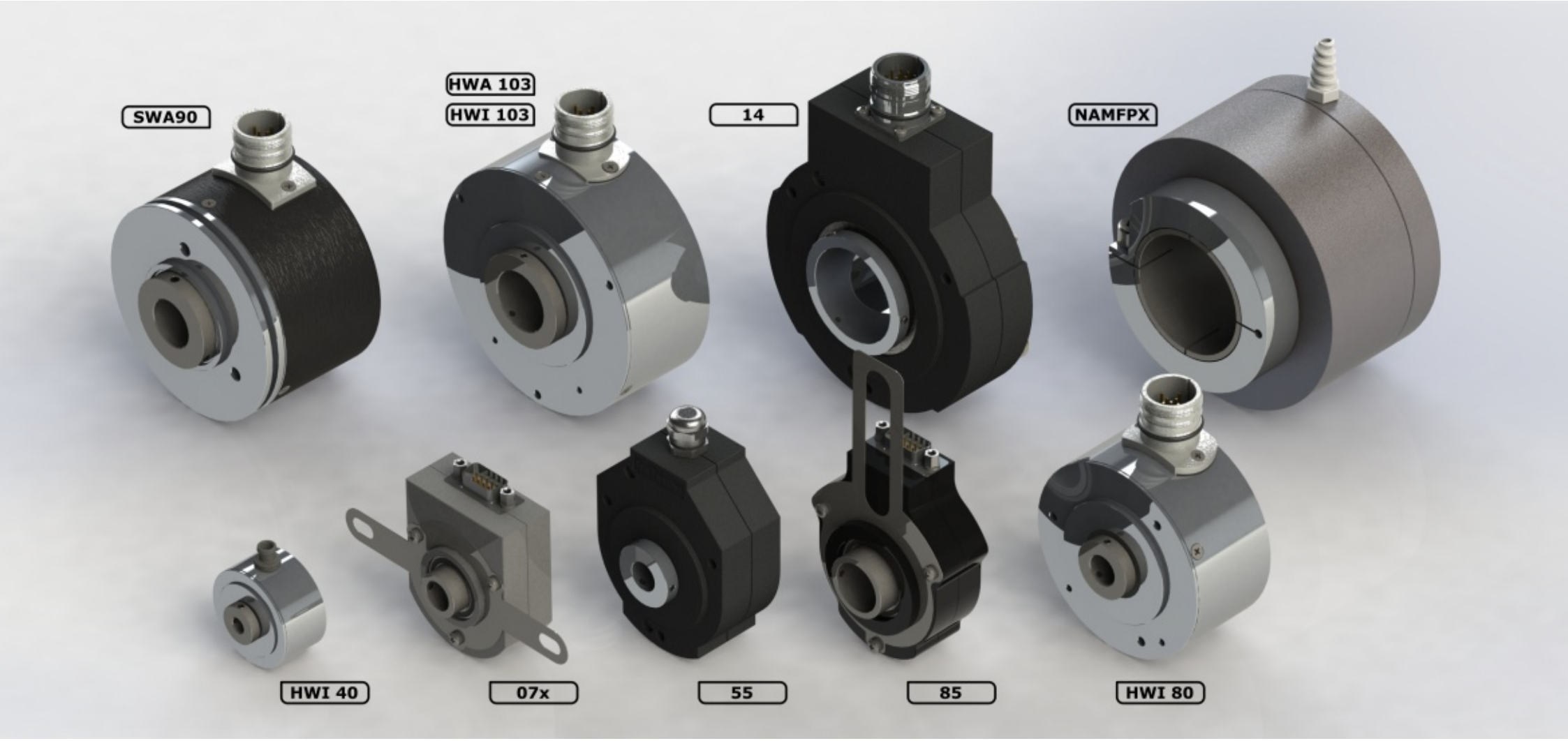

Incremental up to 10000 ppr · Absolute up to 12 bit · Aluminum or Stainless steel housing
High Temperature · Electronic Redundant

Incremental and Absolute blind hollow shaft encoder

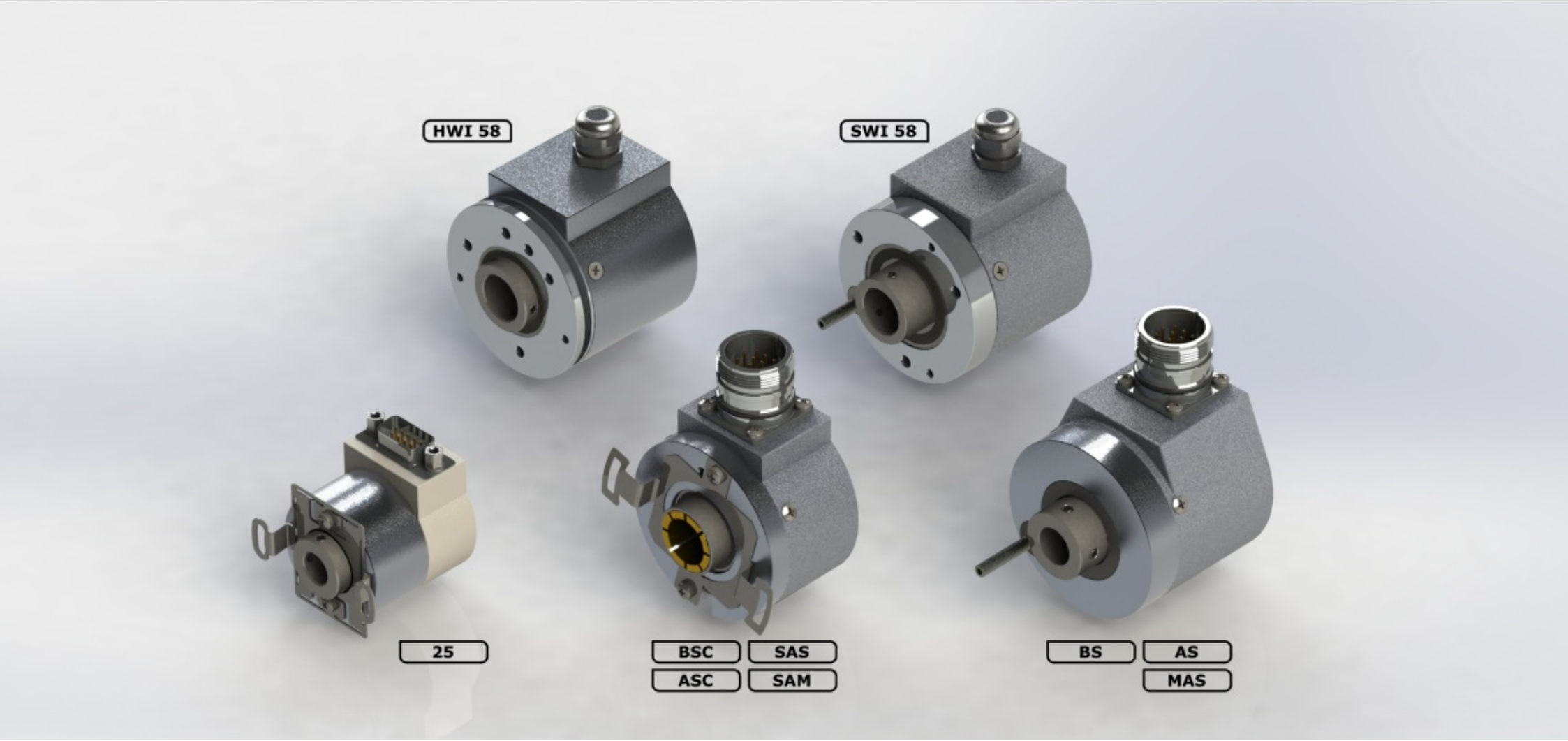

Incremental up to 160000 ppr · Absolute up to 33 bit · Aluminum or Stainless steel housing
High Temperature · Incremental Quadrature output · Absolute Parallel, Analog, SSI output

Fieldbus Absolute Encoder

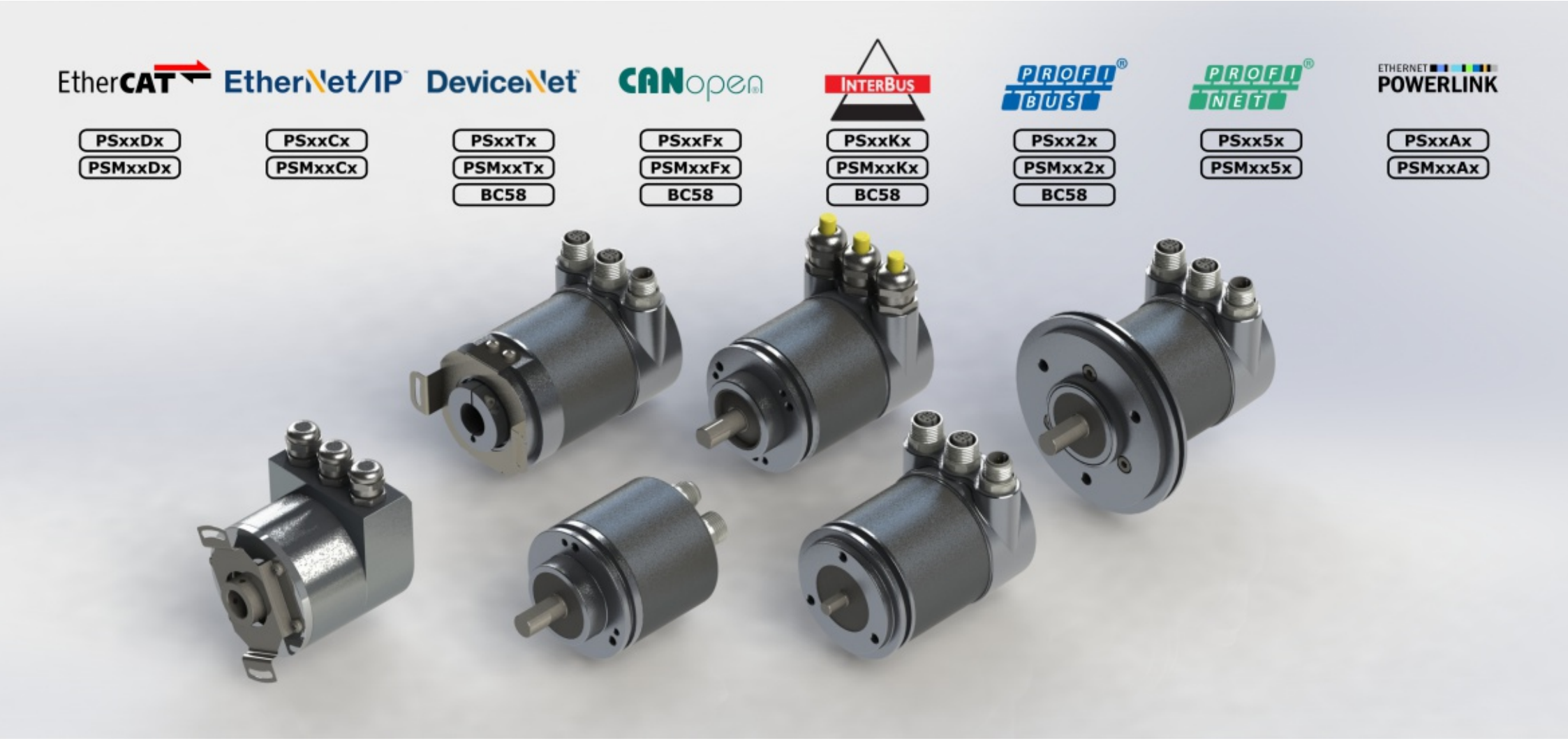

Fieldbus Absolute encoder · Singleturn and Multiturn · Up to 30 bit · Profibus DP · ProfiNet · Powerlink
Ethernet TCP/IP · Ethernet IP · EtherCat · Can open · Can Layer 2 · DeviceNet · Interbus-S

Encoder for Hazardous Areas - ATEX - IECEx

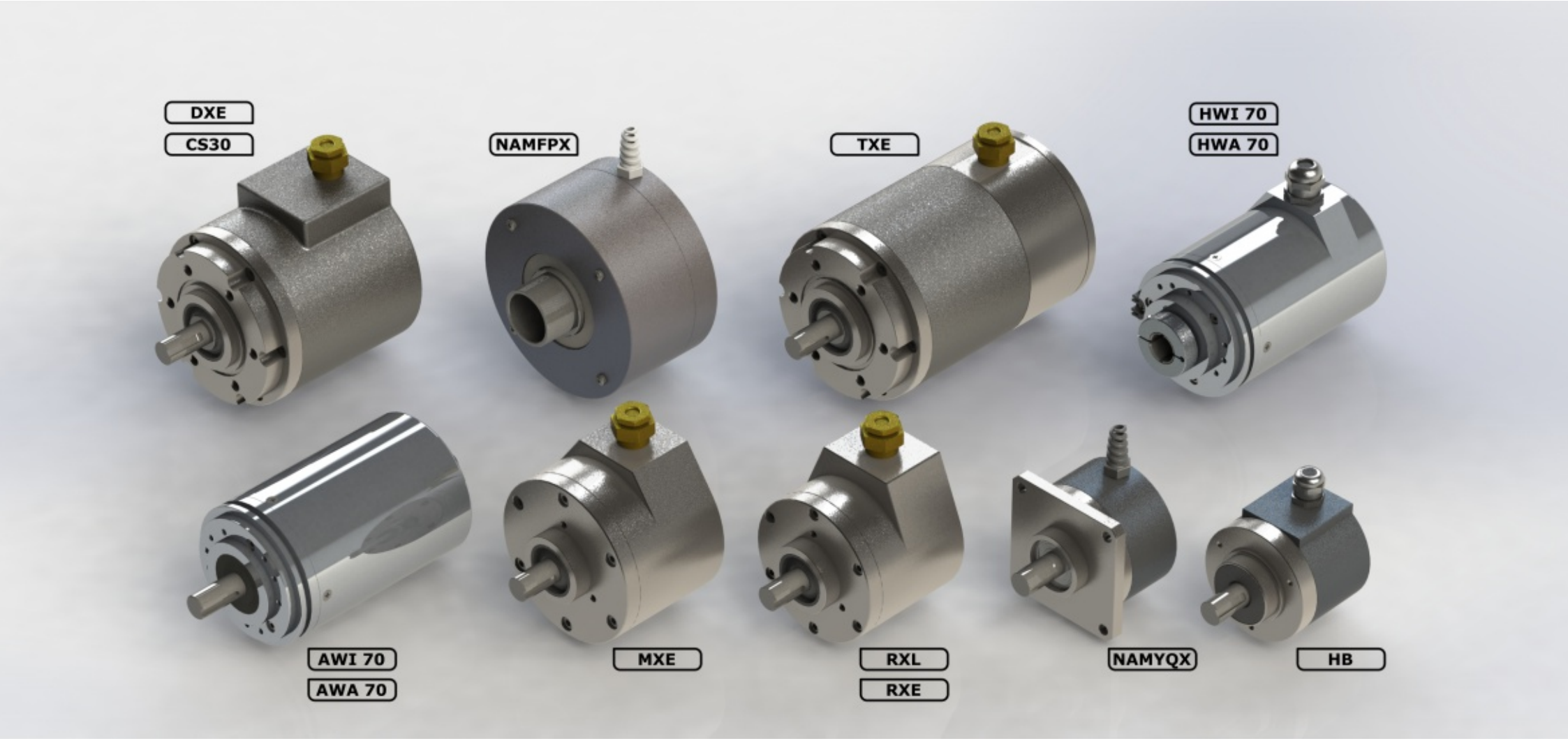

Incremental and Absolute encoder · Zone 0 and Zone 1 · Gas and Dust · Up to -40/+85°
Explosion Proof Ex d IIC (Zone 1, Class 1 Div 1) · Intrinsically Safe Ex ia IIC / IIB (Zone 0, Class 1 Div 1)

Programmable encoder solid and hollow shaft

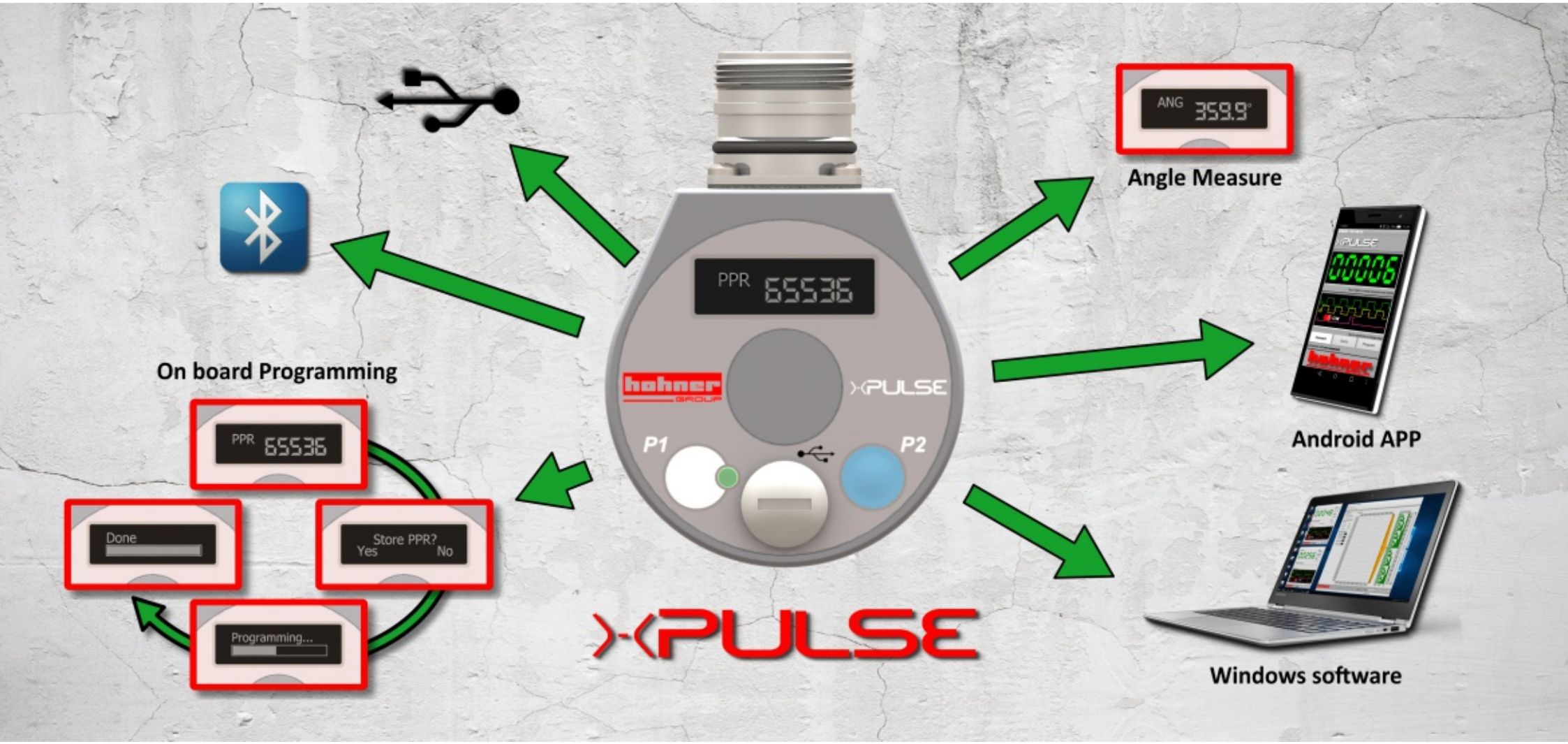

Programmable encoder up to 65536 ppr · 2x incremental encoder · Motor feedback
Absolute encoder · 8 Ways cams Programmer · Display with push button, USB, Bluetooth

Submersible encoder

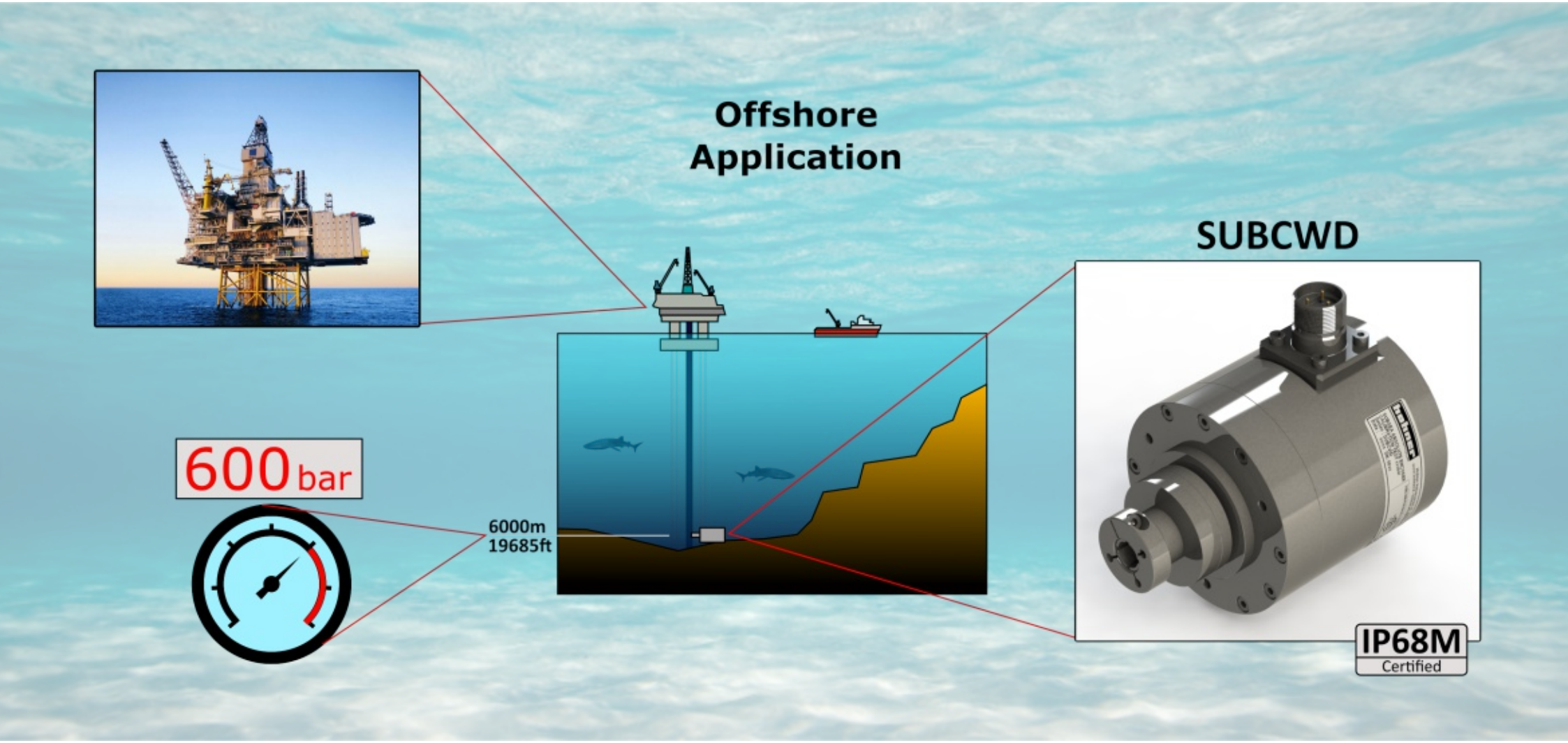

Absolute or Incremental · IP68M up to 600bar · Magnetic Coupling
AISI316L · Single pressure Test on request

Wire Draw System

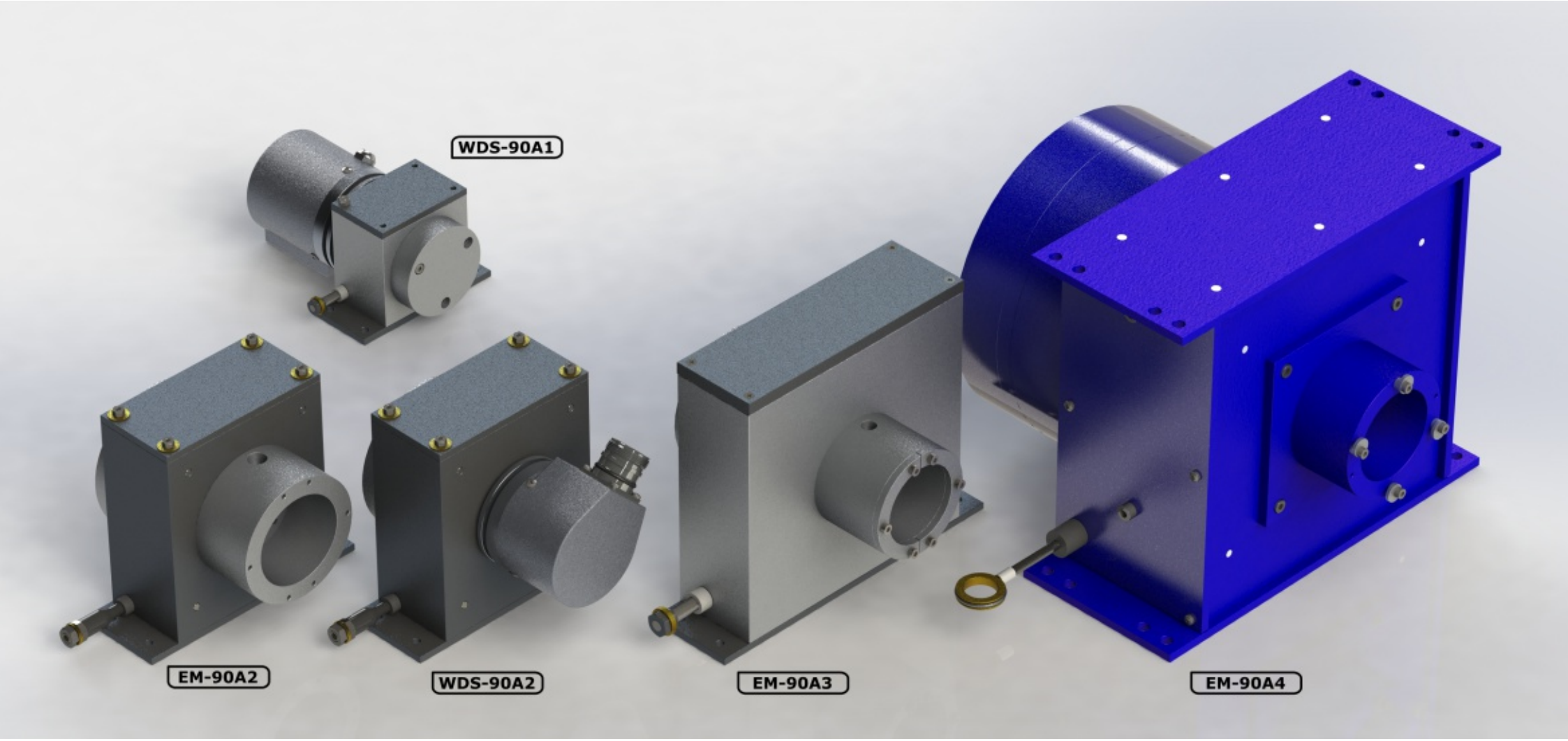

Wire Draw System · From 0.2mt to 60mt · Compatible with all Hohner encoders
Anodized Painted or Stainless Steel Housing · Adapter for 90° wire movement · Magnetic Brake

Oil and Gas - 1

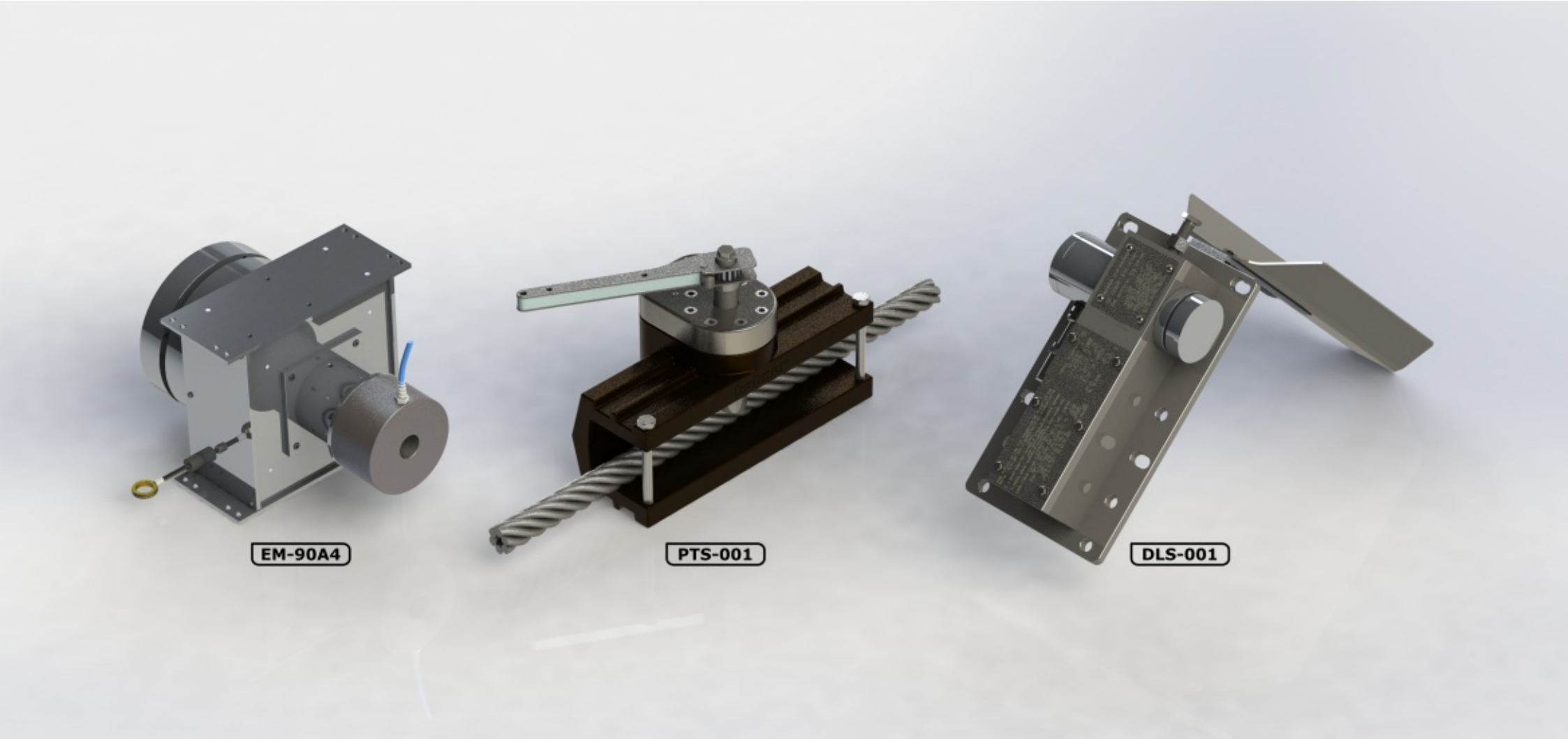

Mud flow level return sensor · Hook load / Dead line sensor · Geolograph / Air line retriever · Heave compensator
TopDrive, DrawWorks, Coil tubing and wireline Encoders · Inclinometer · Shaftless Submersible Encoder 600bar

Oil and Gas - 2

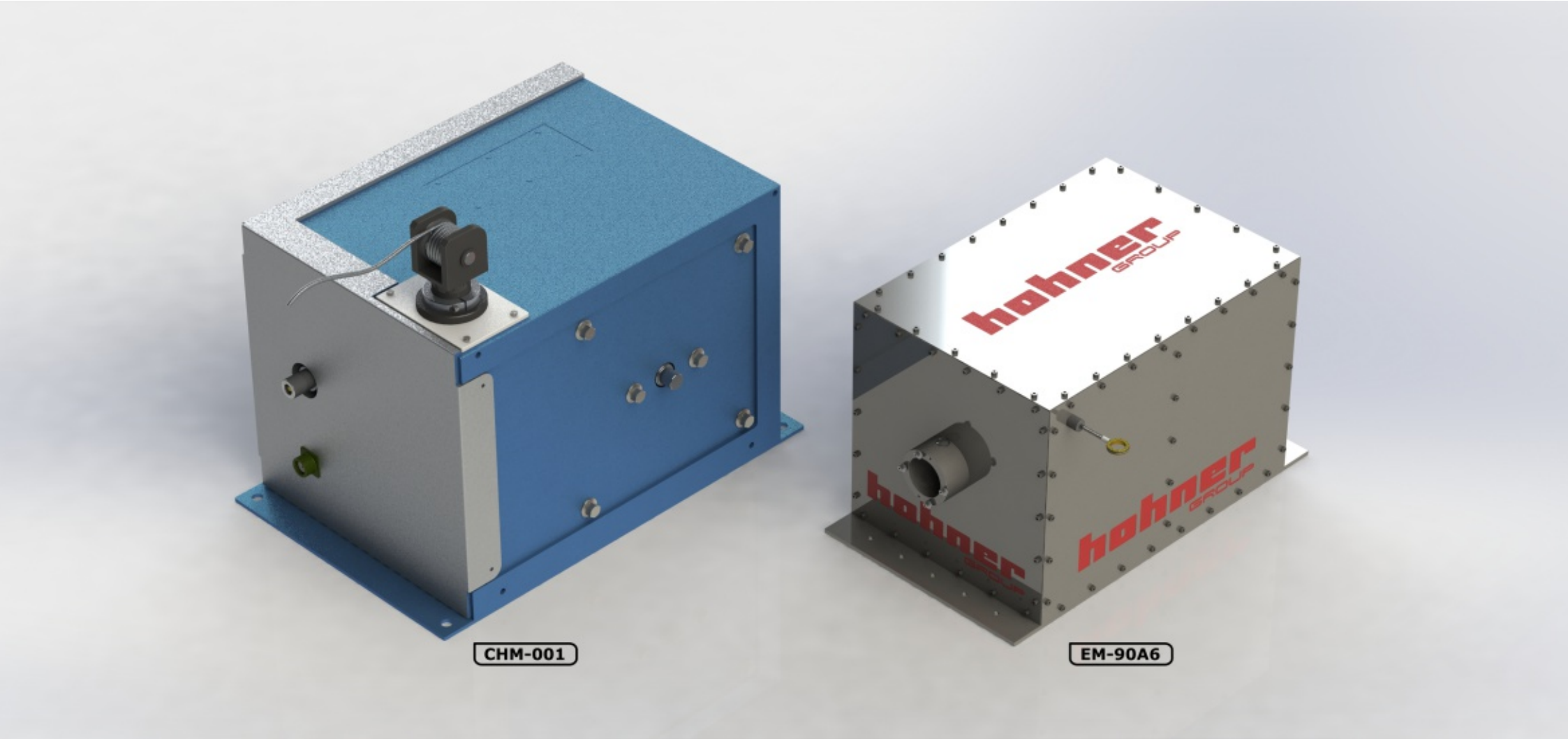

Mud flow level return sensor · Hook load / Dead line sensor · Geolograph / Air line retriever · Heave compensator
TopDrive, DrawWorks, Coil tubing and wireline Encoders · Inclinometer · Shaftless Submersible Encoder 600bar

Magnetic Sensors

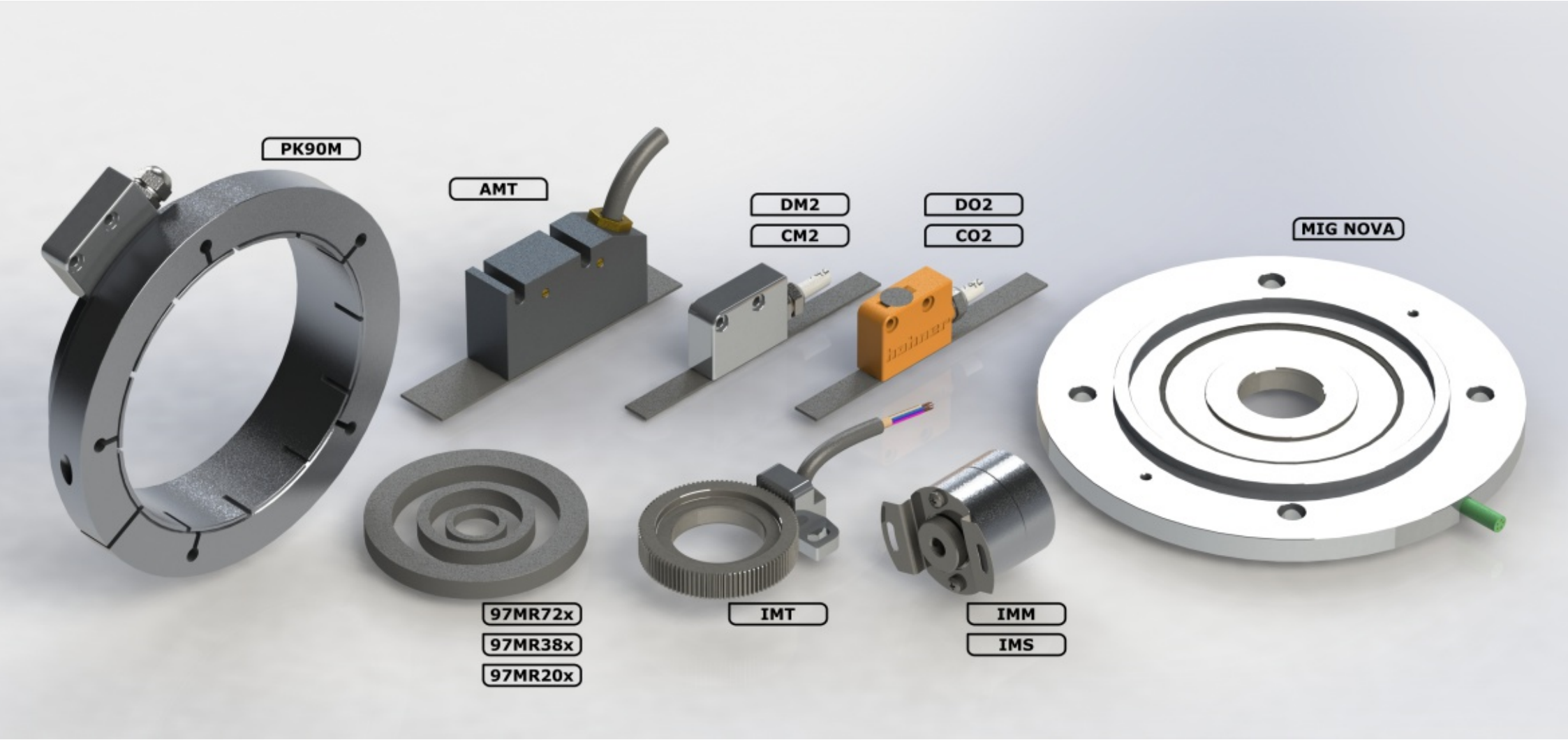

Incremental resolution up to 1um · Pole length 2 or 5mm
Absolute with SSI output · Plastic or Aluminum housing

Wireless Sensor

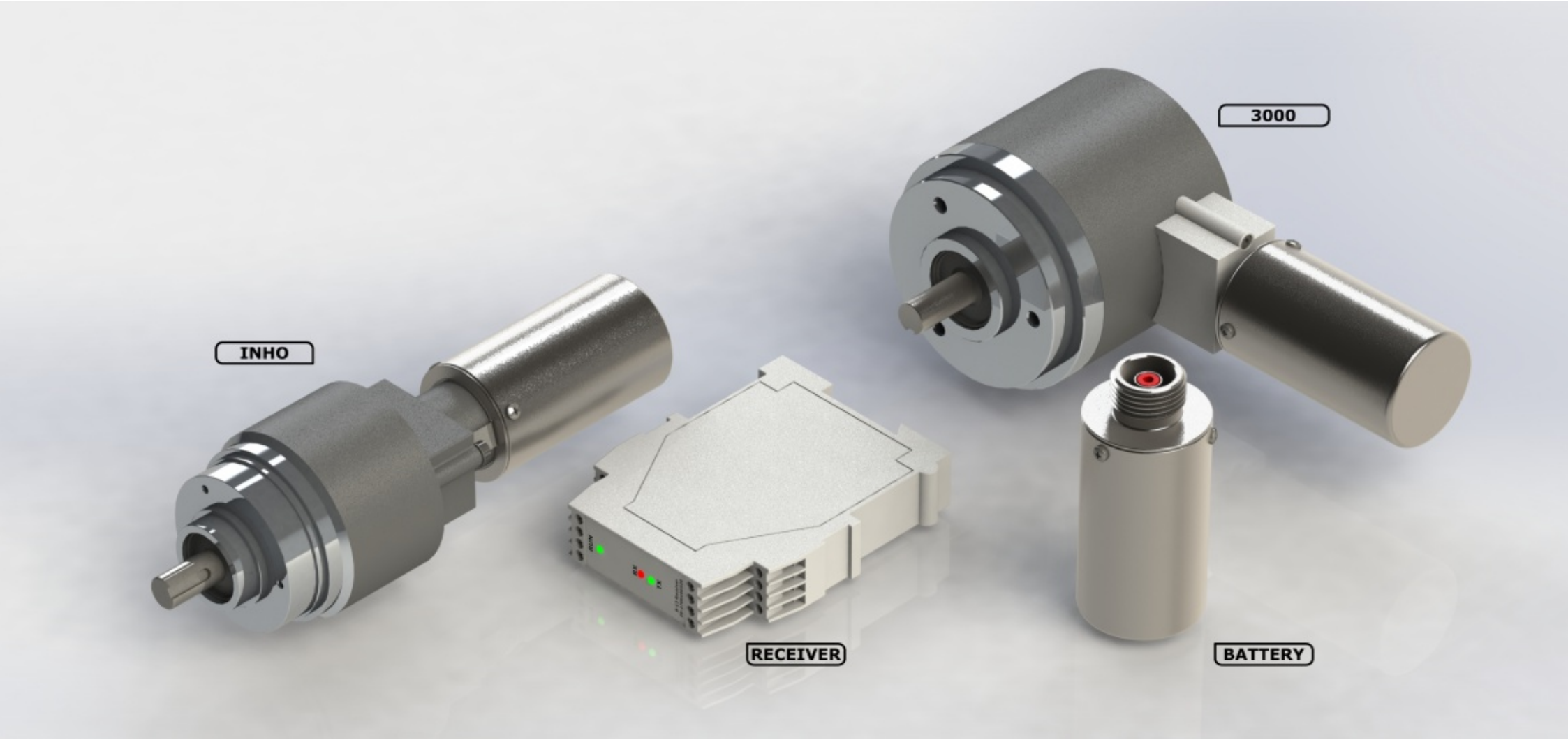

Incremental and Absolute Wireless encoder · Frequncy 2.4GHz · Distance up to 100mt

www.hohner.it · www.hohneronline.co.uk · www.hohner-elektrotechnik.de
www.hohnerencoder.ch · www.encoderonline.com · www.hohner.com.br

Indicator · Counters · Speed Monitors

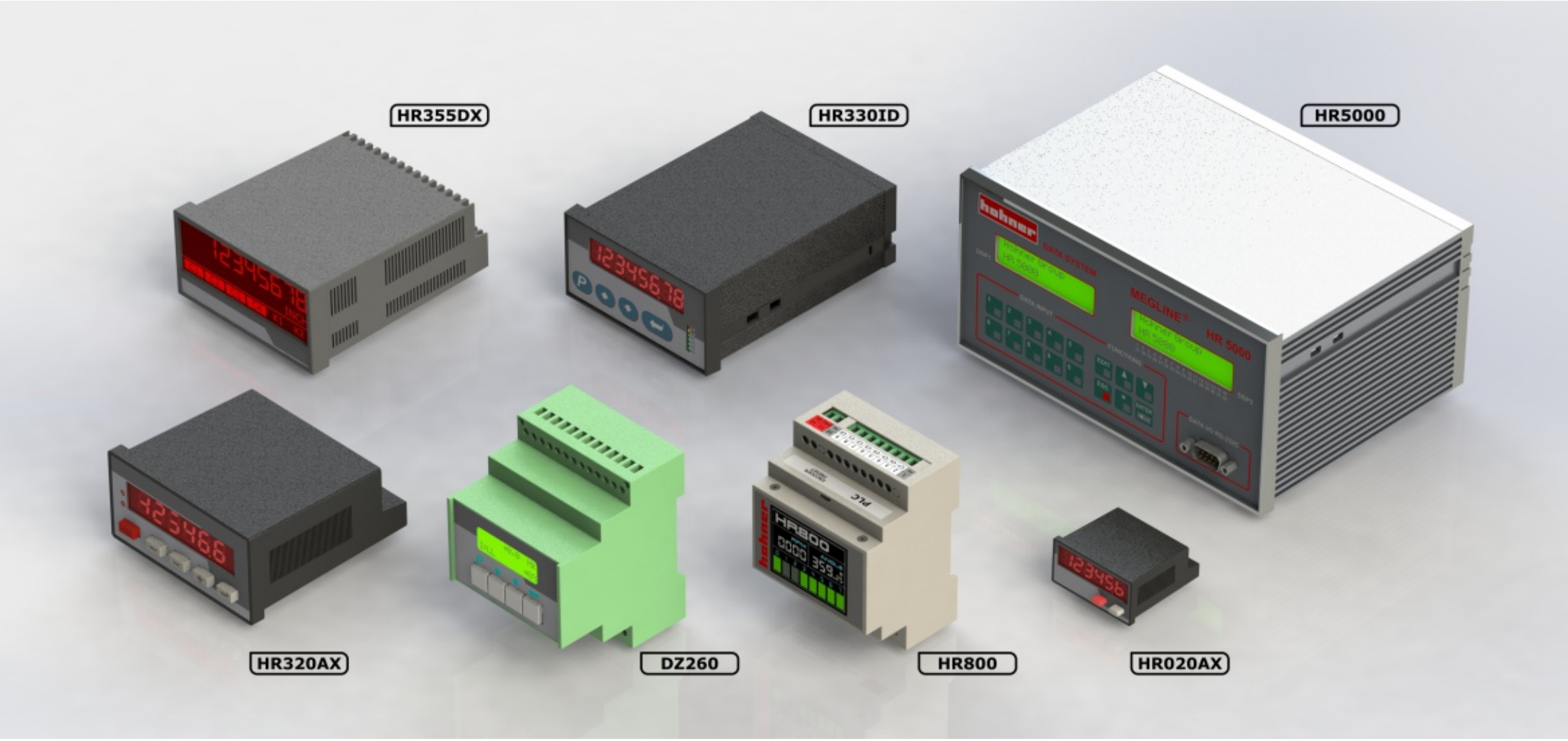

Cam Programmer · Panel Meters indicators · Electronic Counters · Tachometer · Frequency Meters
Timers · Industrial Stopwatches · SSI indicators · Parallel Displays · Speed and Motion Monitors

Signal Converters for Encoder/Sensor

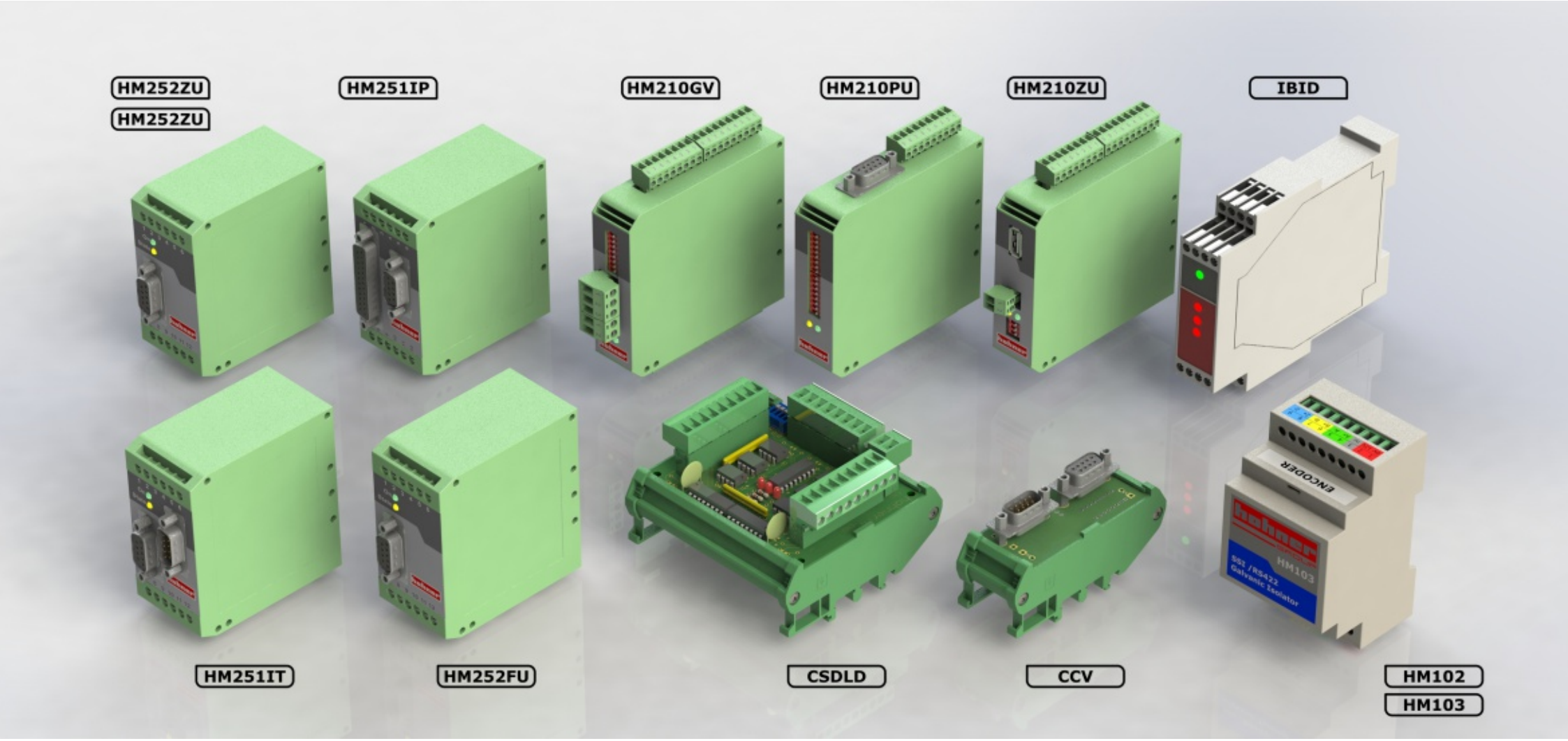

Signals Converters Frequency, Analogue, SSI and Parallel · Level Converter TTL-RS422-HTL
Encoder Distributors · Splitter · Frequency Divider · Multipliers · Interface for SinCos Encoders

Accessories

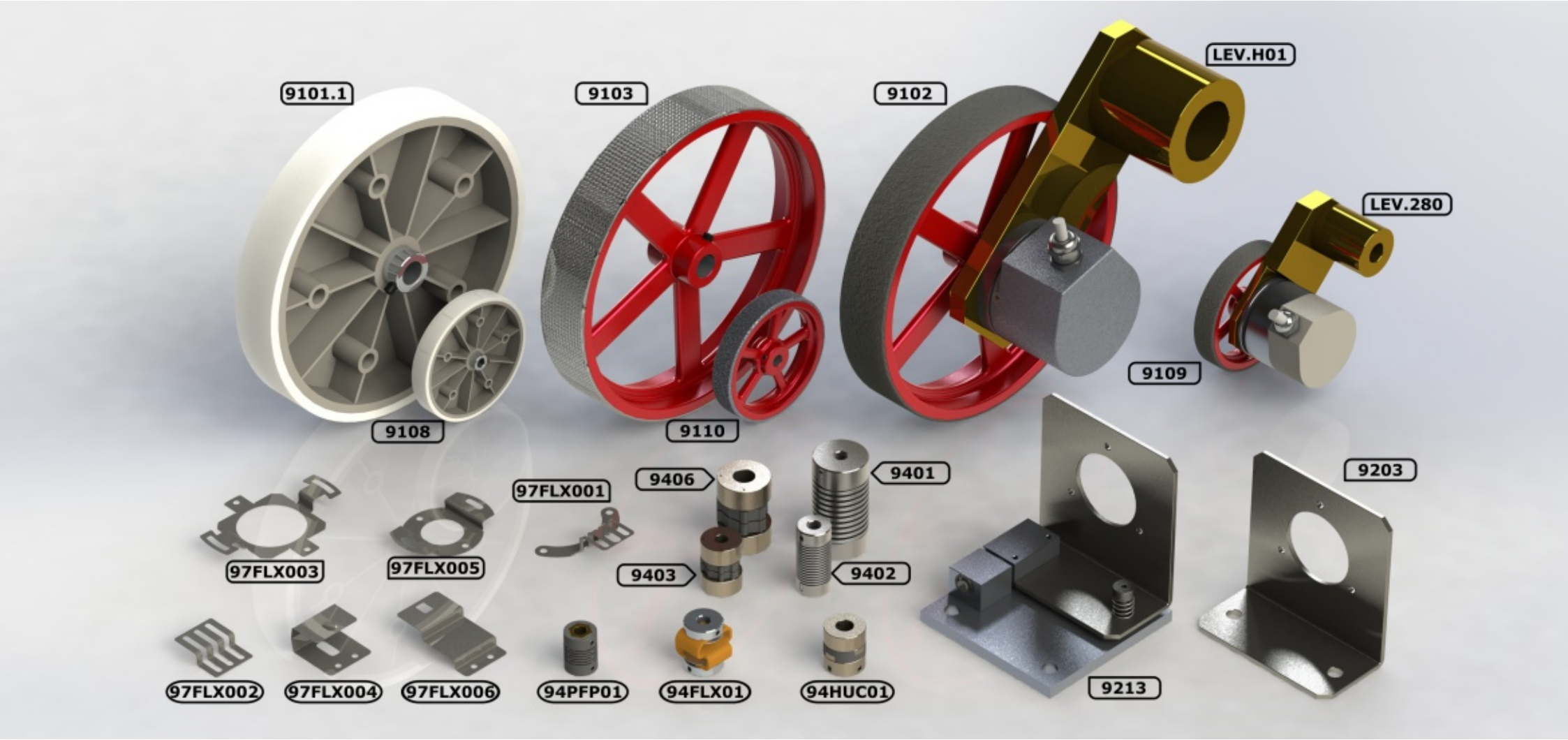

Measuring wheels 200/500mm · Couplings · Anti rotation systems
Preloaded mounting brackets · Lever · Mechanical customization on request

Contacts

HOHNER AUTOMAZIONE

ITALY
+39 0332 866109
www.hohner.it
hohner.info@hohner.it

HOHNER AUTOMATION

UNITED KINGDOM
+44 01978 363 888
www.hohneronline.co.uk
uksales@hohner.com

HOHNER ELEKTROTECHNIK

GERMANY
+49 02389 98780
www.hohner-elektrotechnik.de
info@hohner-elektrotechnik.de

HOHNER GROUP

SWITZERLAND
+41 091 2246540
www.hohnerencoder.ch
info@hohnerencoder.ch

HOHNER CORPORATION

CANADA
+1 800 295 5693
www.encoderonline.com
hohner@hohner.com

HOHNER ELECTRÔNICA

BRASIL
+55 1938 775 214
www.hohner.com.br
vendas@hohner.com.br

Notes